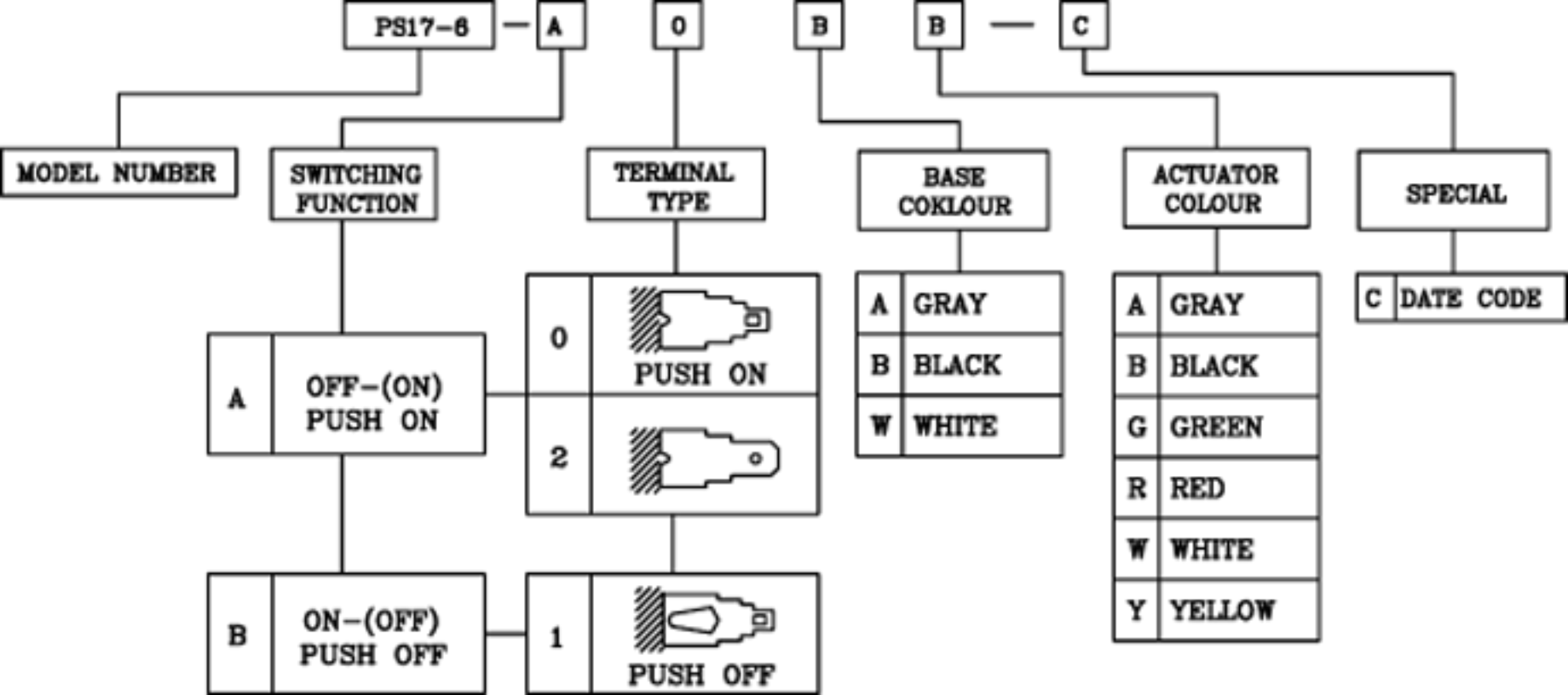
PS17-6
A
0
B
B
C
MODEL NUMBER
SWITCHING FUNCTION
TERMINAL TYPE
BASE COKLOUR
ACTUATOR COLOUR
SPECIAL
A OFF-(ON) PUSH ON
B ON-(OFF) PUSH OFF
0 PUSH ON
2
1 PUSH OFF
A GRAY
B BLACK
W WHITE
A GRAY
B BLACK
G GREEN
R RED
W WHITE
Y YELLOW
C DATE CODE